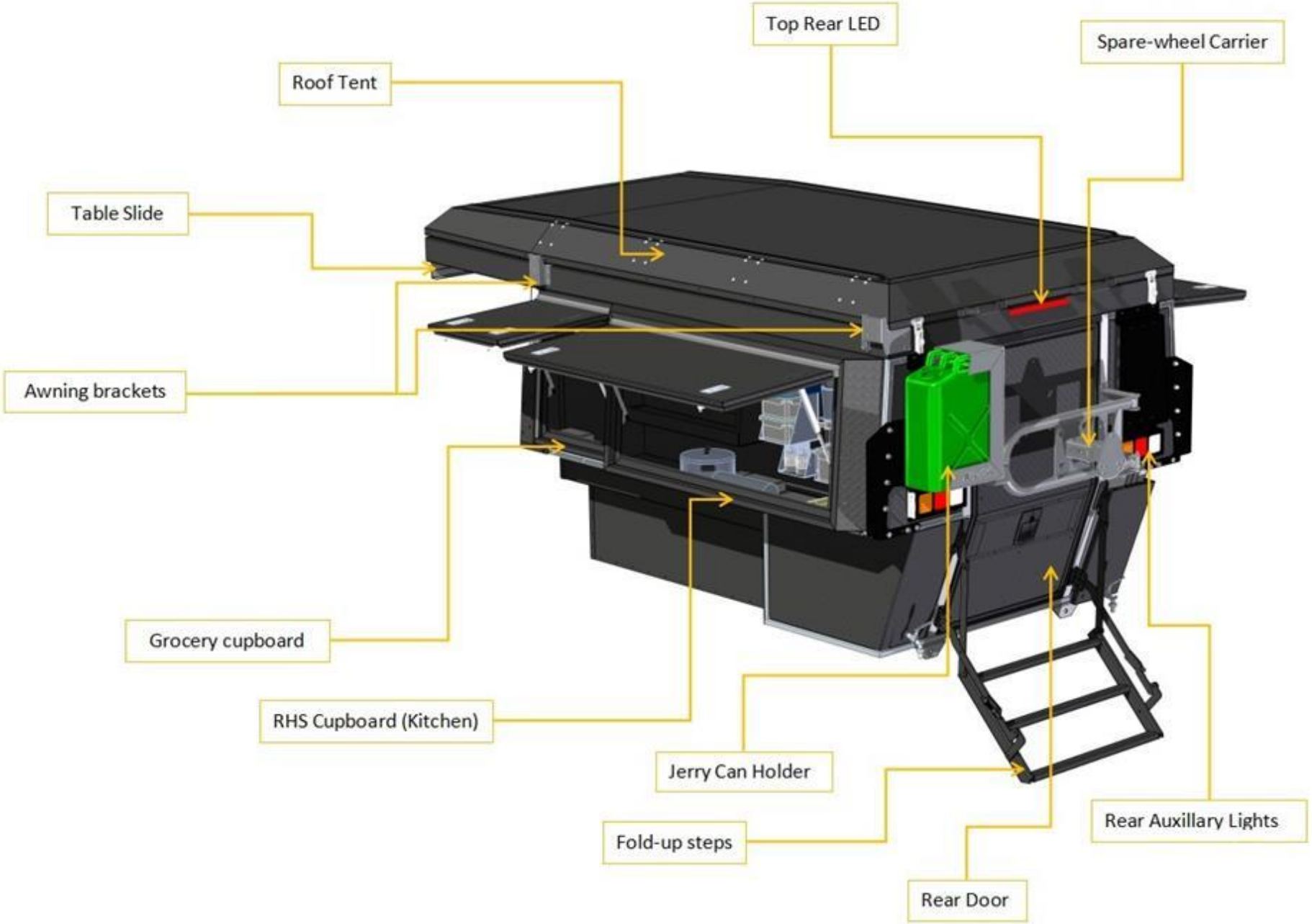
Top Rear LED
Spare-wheel Carrier
Roof Tent
Table Slide
Awning brackets
Grocery cupboard
RHS Cupboard (Kitchen)
Jerry Can Holder
Fold-up steps
Rear Door
Rear Auxillary Lights

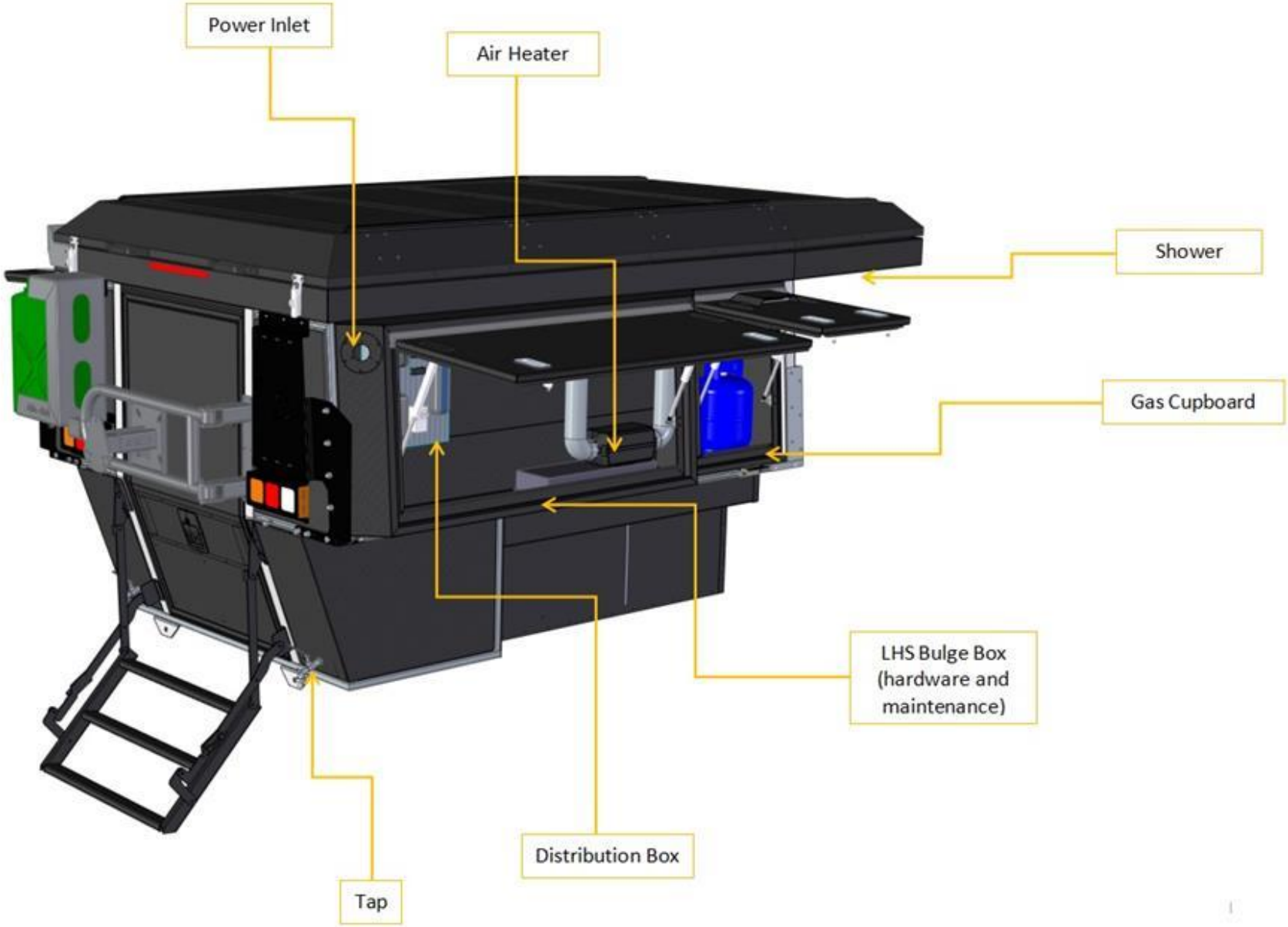
Power Inlet
Air Heater
Shower
Gas Cupboard
LHS Bulge Box (hardware and maintenance)
Distribution Box
Tap

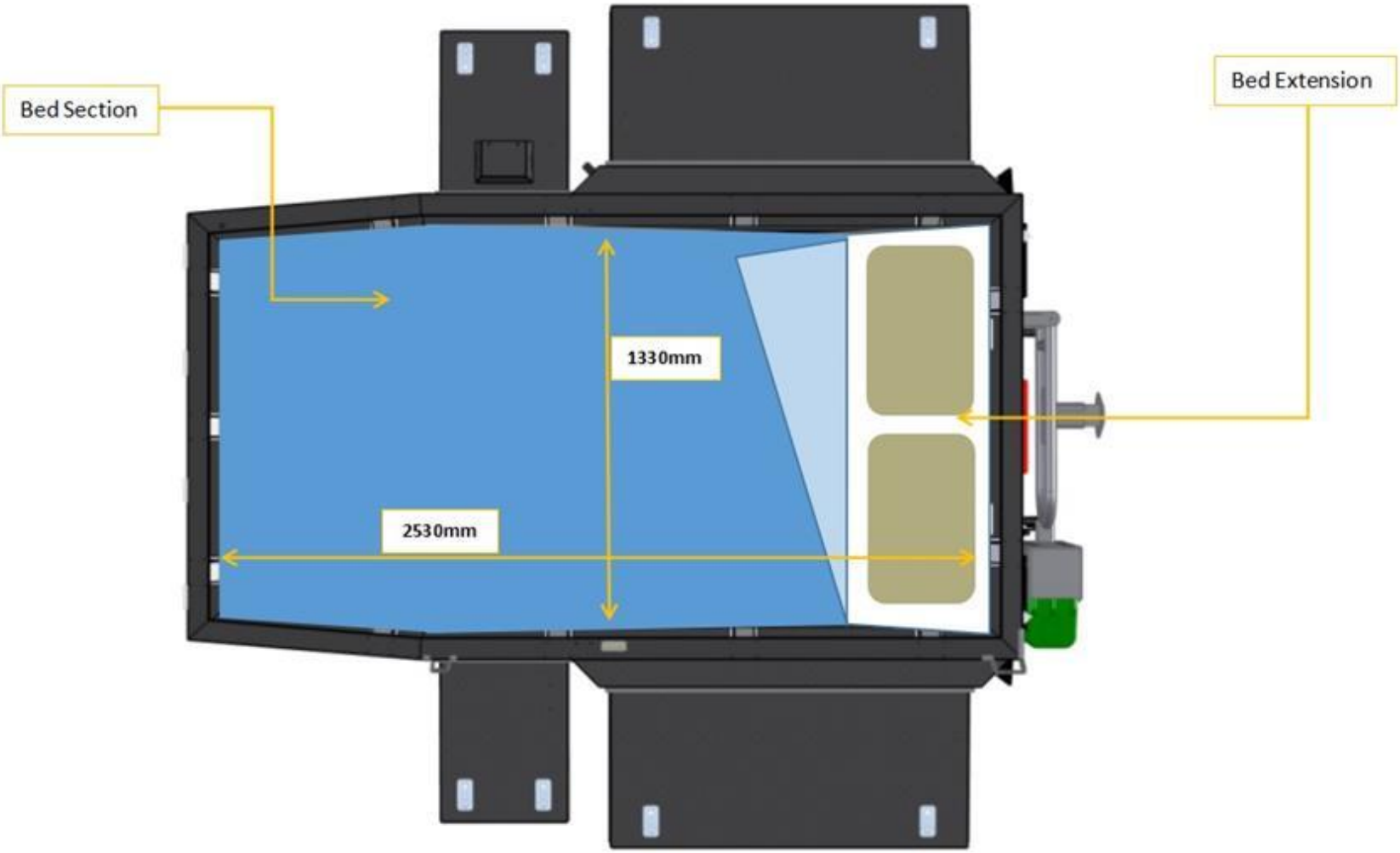
Bed Section
Bed Extension
1330mm
2530mm

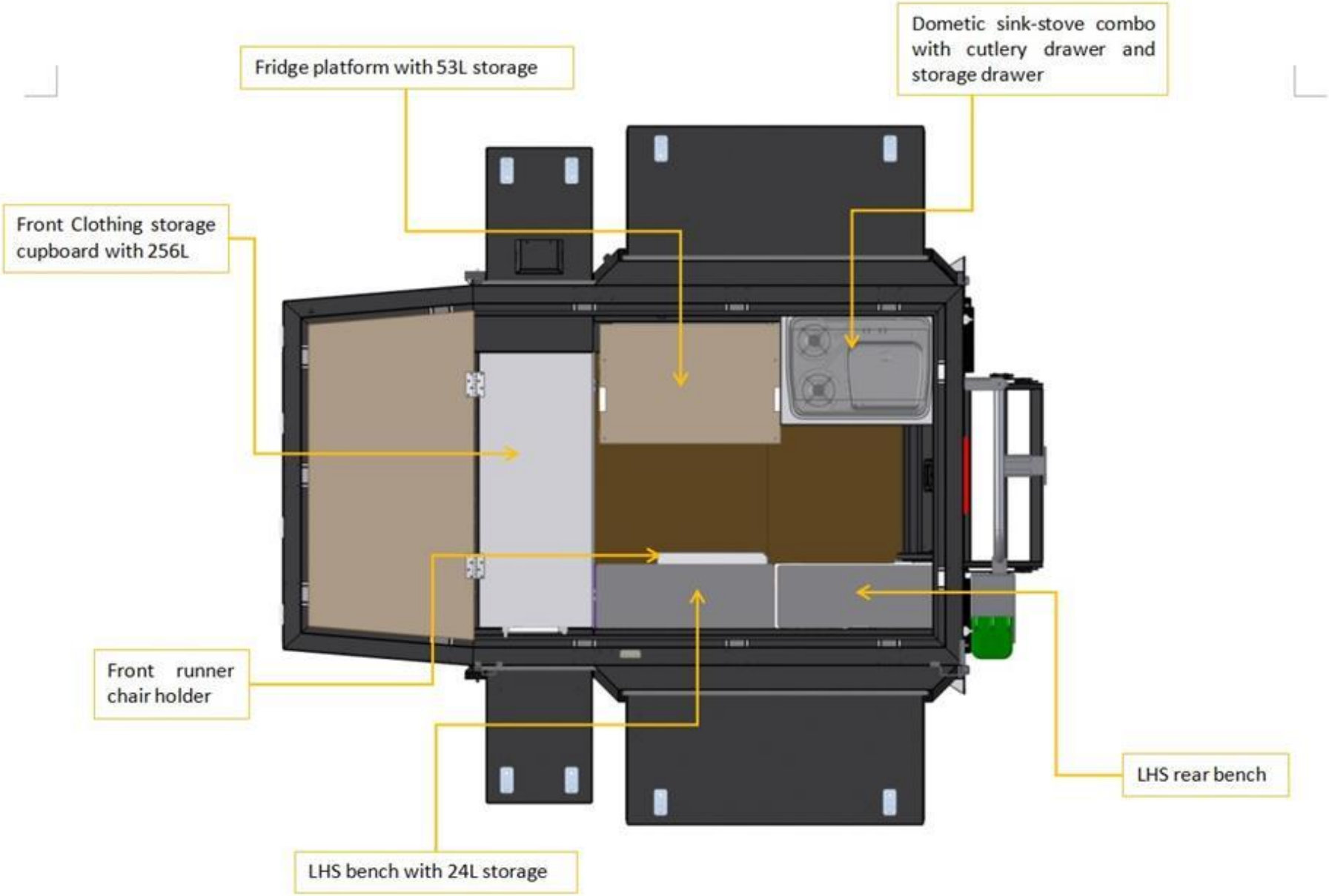
Fridge platform with 53L storage
Dometic sink-stove combo with cutlery drawer and storage drawer
Front Clothing storage cupboard with 256L
Front runner chair holder
LHS rear bench
LHS bench with 24L storage